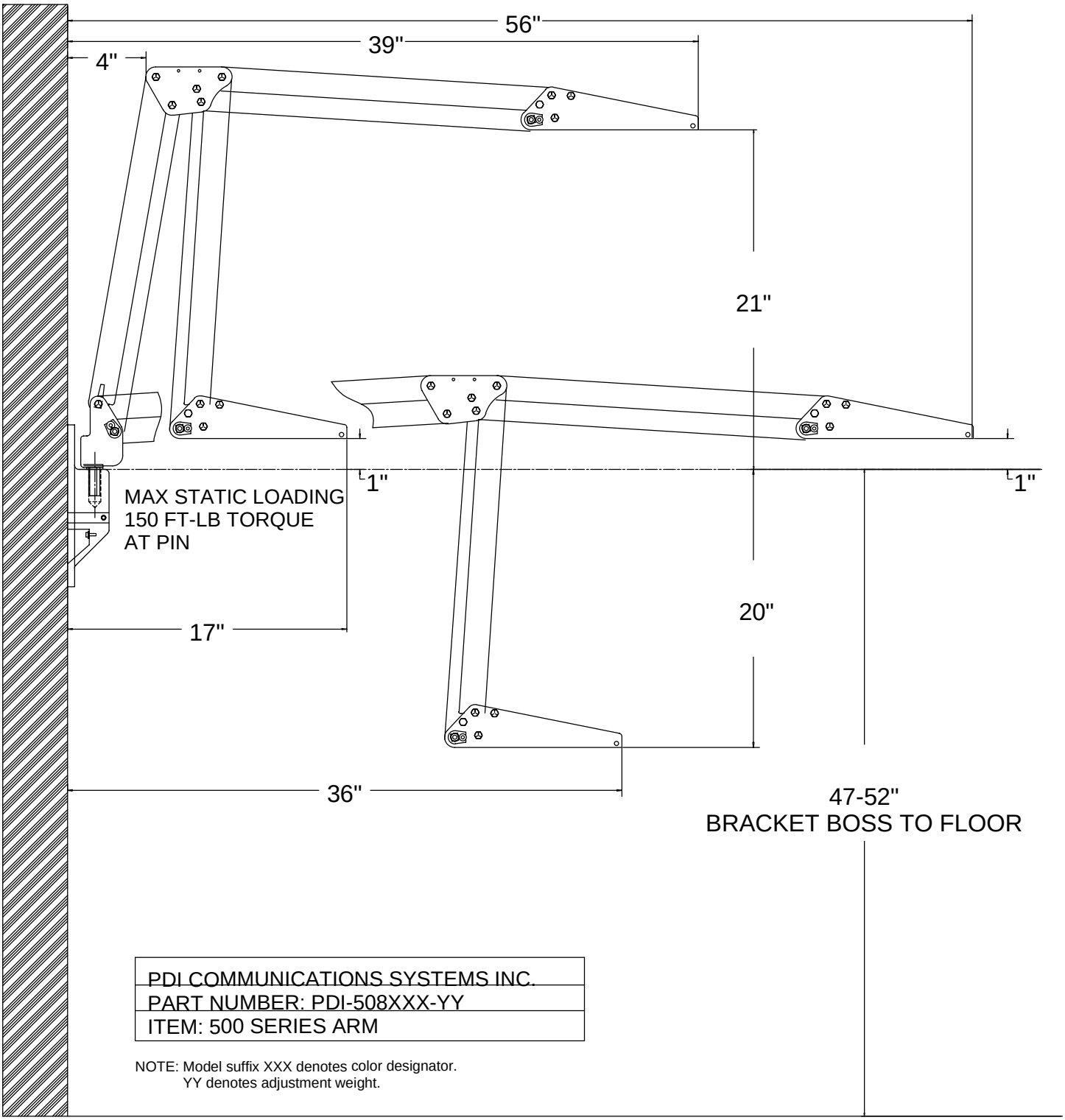

PDI COMMUNICATIONS SYSTEMS INC.
PART NUMBER: PDI-508XXX-YY
ITEM: 500 SERIES ARM

NOTE: Model suffix XXX denotes color designator.
YY denotes adjustment weight.